ABRA Neoteric Lighting Design

Assembly and Installation Instructions for Model's

50175ODW

CAUTION - RISK OF FIRE

Installation of this fixture should be done by a licensed electrician or by a person familiar with local electrical codes and the construction and operation of this fixture.

Warning please make sure the electrical breaker is shut off before commencing with this installation

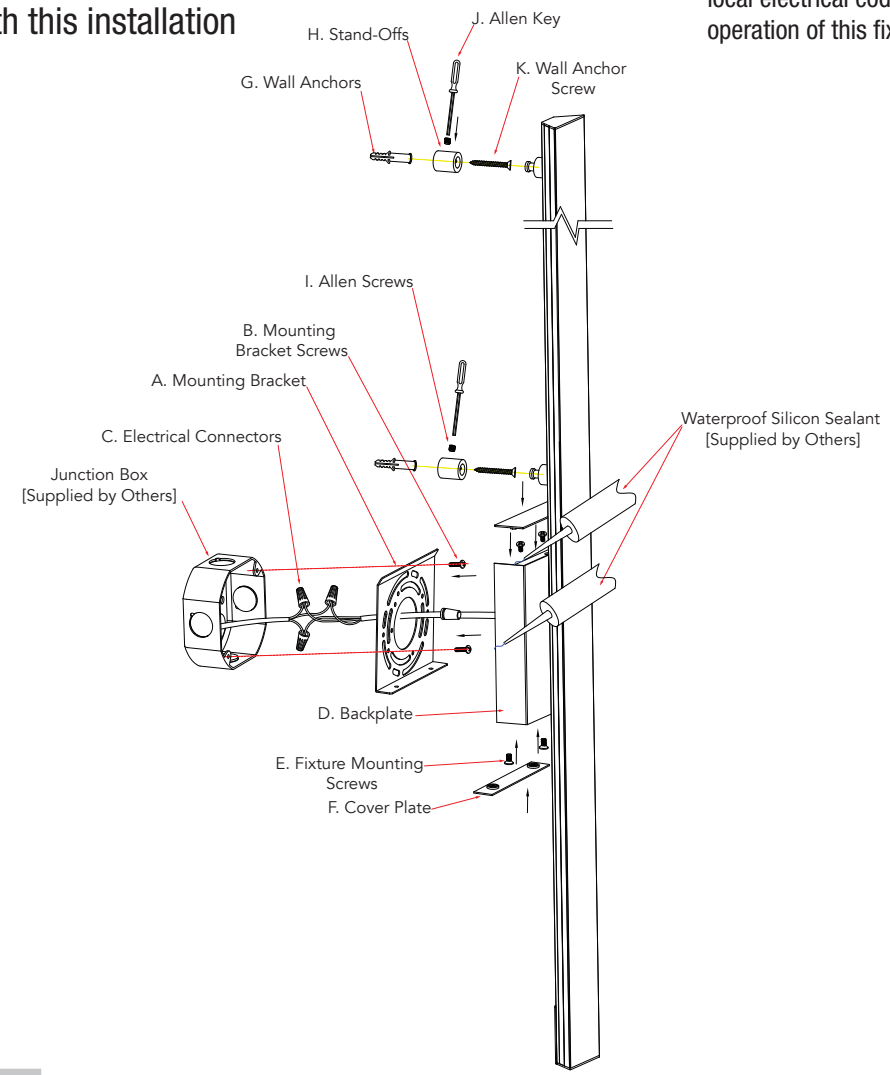

Package Contents

Part	Description	
A	Mounting bracket	1
B	Mounting bracket screws	2
C	Electrical Connectors	3
D	Backplate	1
E	Fixture mounting screws	4
F	Cover plates	2
G	Wall anchors	2
H	Stand-offs	2
I	Allen screws	2
J	Allen key	1
K	Wall anchor screws	2

Installing the fixture

please ensure the electrical breaker is in the Off position before commencing

1	Place the Backplate **(D)** up to the Junction Box [Supplied by Others] and mark where the Wall anchors **(G)** will be installed. Remove the Backplate.
2	Attach the Mounting bracket **(A)** to the Junction Box [Supplied by Others] using the Mounting bracket screws **(B).** Install the Wall anchors **(G)** into the marked spot.
3	Connect the supply wires to the fixture wires using the supplied electrical wire connectors **(C)**. White supply wire to the White fixture wire, Black supply wire to Black fixture wire and the ground Bare Copper or Green wire to the Green fixture wire. Once the electrical wire connectors are securely fastened it is recommended to tape these connectors with electrical tape.
4	Secure the Stand-offs **(H)** to the Wall anchors **(G)** using the Wall anchor screws **(K)** supplied.
5	Attach the Backplate **(D)** to the Mounting bracket **(A)** using the Fixture mounting screws **(E)** supplied. Secure the Fixture to the Stand-offs **(H)** using the Allen screws **(I)** and Allen key **(J)** supplied.
6	Use the magnetic Cover plates **(F)** to hide the screws on the Backplate **(D)** and seal the Backplate using a waterproof silicon caulk [Supplied by Others] so that no moisture may enter.
7	Switch on the electrical breaker switch and your new fixture is ready for many years of trouble free use.

ABRA

Neoteric Lighting Design

Assembly and Installation Instructions for Model's

50175ODW

CAUTION - RISK OF FIRE

Installation of this fixture should be done by a licensed electrician or by a person familiar with local electrical codes and the construction and operation of this fixture.

Warning please make sure the electrical breaker is shut off before commencing with this installation

Remote Driver Instructions

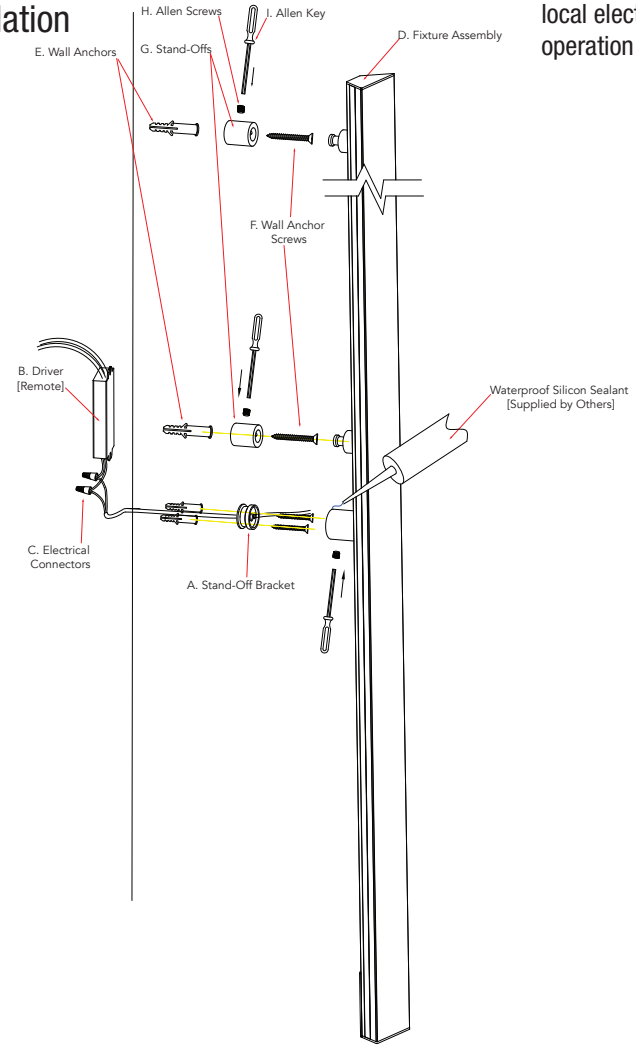

Package Contents

Part	Description	
A	Stand-off bracket	1
B	Driver (remote)	1
C	Electrical Connectors	3
D	Fixture assembly	1
E	Wall anchors	4
F	Wall anchor screws	4
G	Stand-offs	2
H	Allen screws	3
I	Allen key	1

Installing the fixture

please ensure the electrical breaker is in the Off position before commencing

1	Remote the driver **(B)** and thread the wires through the Stand-off bracket **(A)** and into the small hole in the wall where the driver was remoted.
2	Connect the supply wires to the fixture wires using the supplied electrical wire connectors **(C)**. White supply wire to the White fixture wire, Black supply wire to Black fixture wire and the ground Bare Copper or Green wire to the Green fixture wire. Once the electrical wire connectors are securely fastened it is recommended to tape these connectors with electrical tape
3	Mark where two of the Wall anchors **(E)** will be placed to secure the Stand-off bracket **(A)** to the wall. Insert the two Wall anchors **(E)** into the marked spots. Secure the Stand-off bracket to the wall by inserting two of the Wall anchor screws **(F)** through the Bracket and into the wall anchors .
4	Place the Fixture **(D)** up to the Stand-off bracket **(A)** and mark where the remaining wall anchors **(E)** will be placed.
5	Install the last Wall anchors **(E)** into their marked spots and secure the Stand-offs **(G)** to the wall using the remaining Wall anchor screws **(F)**.
6	Secure the Fixture assembly **(D)** to the stand-offs **(A)**+**(G)** using the Allen screws **(H)** and the Allen key **(I)** provided.
7	Seal the Stand-offs **(A)**+**(G)** using a waterproof silicon caulk [Supplied by Others] so that no moisture may enter.
8	Switch on the electrical breaker switch and your new fixture is ready for many years of trouble free use.